OptiFlex-K1

Service Manual

Table of contents

1. History

Revision	Date	Name	Change
1	01.08.2007	S. Herr	Service Manual created

2. Purpose

The purpose of this Service Manual is to help you make simple repairs on the OptiFlex -K1. Only authorized staff may perform repairs and maintenance as the manufacturer's warranty and liability would otherwise be invalidated.
Only original parts may be used for servicing in accordance with the attached spare parts list.

3. General

3.1 Electronics, connection cables

No plugs may be connected or disconnected while the unit is switched on. Always switch the OptiFlex -K1 off before connecting or disconnecting a plug.

The locks for spiral cable for the hand-held programming unit have to be closed at all times.

When you assembling with electronic parts make sure to use ESD (Electro Static Discharge) equipment.

If you have to exchange any of the printed circuit boards including the knee electronics or motor control you have to perform a calibration.

Possible errors: Errors will be displayed on the hand-held programming unit as follows shown:

ERROR
XX (XX = Number of the error)

1 Potentiometer error:
Wrong angle information
-> Check the femur settings
-> Replace knee electronics (Pos. 3)
-> Replace motor control (Pos. 20)

2 Failure at the potentiometer:
Connection to the potentiometer is interrupted
-> Replace the spiral cable of the potentiometer (Pos. 19)
-> Replace knee electronics (Pos. 3)
-> Replace motor control (Pos. 20)

3 Motor driver error:
The motor driver IC reported an error
-> Replace motor control (Pos. 20)

4 Motor error:
The motor did not turn properly
-> Replace motor control (Pos. 20)
-> Replace the motor (Pos. 21)

5 Motor over current:
The current for the motor exceeded the maximum limit
-> Check the mechanics (Pos. 25)
-> Replace motor control (Pos. 20)
-> Replace the motor (Pos. 21)

6 Motor control error:
Internal error in the motor control.
-> Replace motor control (Pos. 20)

7 Eprom access error:
Memory error in the access of the EPROM
-> Replace the hand held programming unit (Pos. 14)

8 CPM ROM error:
Memory error in the motor control
-> Replace motor control (Pos. 20)

9 Communication:
Communication to the motor control is not possible
-> Check spiral cable and connector (Pos. 15)
-> Replace the hand held programming unit (Pos. 14)
-> Replace motor control (Pos. 20)

10 General error in the motor control:
Unknown error in the motor control
-> Replace motor control (Pos. 20)

11 Motor enable timeout
Motor could not be enabled in time
-> Replace motor control (Pos. 20)

12 Invalid parameter motor error:
Motor has received a invalid parameter
-> Replace motor control (Pos. 20)
-> Replace the hand held programming unit (Pos. 14)

13 Stop release error:
The motor could not be released
-> Replace motor control (Pos. 20)
-> Replace the hand held programming unit (Pos. 14)

14 Unexpected motor Stop:
-> Check spiral cable and connector (Pos. 15)
-> Replace motor control (Pos. 20)

15 Motor disabled:
Motor control disabled the motor.
-> Replace motor control (Pos. 20)

16 Wrong command in the motor :
-> Replace motor control (Pos. 20)
-> Replace the hand held programming unit (Pos. 14)

17 5V supply error:
5V supply of motor control not sufficient
-> Replace motor control (Pos. 20)

18 Initialise error real time clock:
-> Replace the hand held programming unit (Pos. 14)

19 Communication error real time clock:
-> Replace the hand held programming unit (Pos. 14)

20 Error real time clock:
-> Replace the hand held programming unit (Pos. 14)

21 Range exceeded:
The measured angle is out of the range of motion
-> Replace motor control (Pos. 20)

22 ROM error in the hand held programming unit:
Memory error in the hand held programming unit
-> Replace the hand held programming unit (Pos. 14)

23 Invalid parameter:
Internal error in the hand held programming unit
-> Replace the hand held programming unit (Pos. 14)

24 24V supply error motor control:
Error in the 24V supply in the motor control
-> Replace motor control (Pos. 20)
-> Replace the power supply electronics (Pos. 23)

25 Bus error:
Bus system error
-> Replace the spiral cable of the hand held programming unit (Pos. 15)
-> Replace the hand held programming unit (Pos. 14)
-> Replace motor control (Pos. 20)

26 24V supply hand held programming unit:
24V supply of the hand held programming unit is defective
-> Replace the hand held programming unit (Pos. 14)

27 5V supply hand held programming unit:
5V supply of the hand held programming unit is defective
-> Replace the hand held programming unit (Pos. 14)

28 3.3V supply hand held programming unit:
3.3V supply of the hand held programming unit is defective
-> Replace the hand held programming unit (Pos. 14)

29 Calibration:
The calibration data in the motor control are wrong.
-> Perform a calibration (see chapter 8.1)

30 Calibration error:
-> Repeat the calibration (see chapter 8.1)
-> Replace knee electronics (Pos. 3)
-> Replace motor control (Pos. 20)

31 Calibration timeout:
-> Replace motor control (Pos. 20)

32 Motor enable error:
The motor could not be enabled
-> Replace motor control (Pos. 20)

33 Motor disable error:
The motor could not be disabled
-> Replace motor control (Pos. 20)

34 Motor stop error:
Motor stop command timeout error
-> Replace motor control (Pos. 20)

35 Configuration error:
Invalid configuration of the hand held programming unit
-> Replace the hand held programming unit (Pos. 14)

45 Wrong product combination:
Mixup between non compatible device and hand held programming unit
-> Use the correct hand held programming unit (Pos. 14)

46 Handset error internal communication:
Invalid interchip communication inside the hand held programming unit
-> Replace the hand held programming unit (Pos. 14)

47 Internal communication error motor control:
Internal communication error motor control.
-> Replace motor control (Pos. 20)

48 User stoped the special function

49 Unknown error in the motor control:
-> Replace motor control (Pos. 20)

3.2 Mechanics

The movable screws should not be completely unscrewed when adjustments are being made. Make sure that the movable screws are tightened for operation and transport.

The frame is unstable:
Possible cause: Bolt / screws missing or loose. Tighten the screws / bolts.

3.3 Others

Do not clean the housing or the support with grease or oil.

No solvents may be used when cleaning the OptiFlex-K1.

4. Packing and unpacking the OptiFlex-K1

The following settings must be made to transport the OptiFlex-K1:

Set the packing setting in the menu or move the device in a position of EXTENSION 0 degrees.

Switch off the OptiFlex-K1.

Remove the power cord and disconnect the hand held programming unit.

Only use original packaging for transport.
Put the hand-held programming unit into the extra box.

Set the femur lenght on maximum and the lower leg setting on 42 cm.

Set the angle joint horizontal.

Move the two styrofoam parts and the extra protection for the knee joint on the device

First put the power cord and the extra box with the hand held programming unit on the bottom of the box as shown on the figure below and then the OptiFlex-K1 with the two styrofoam parts.

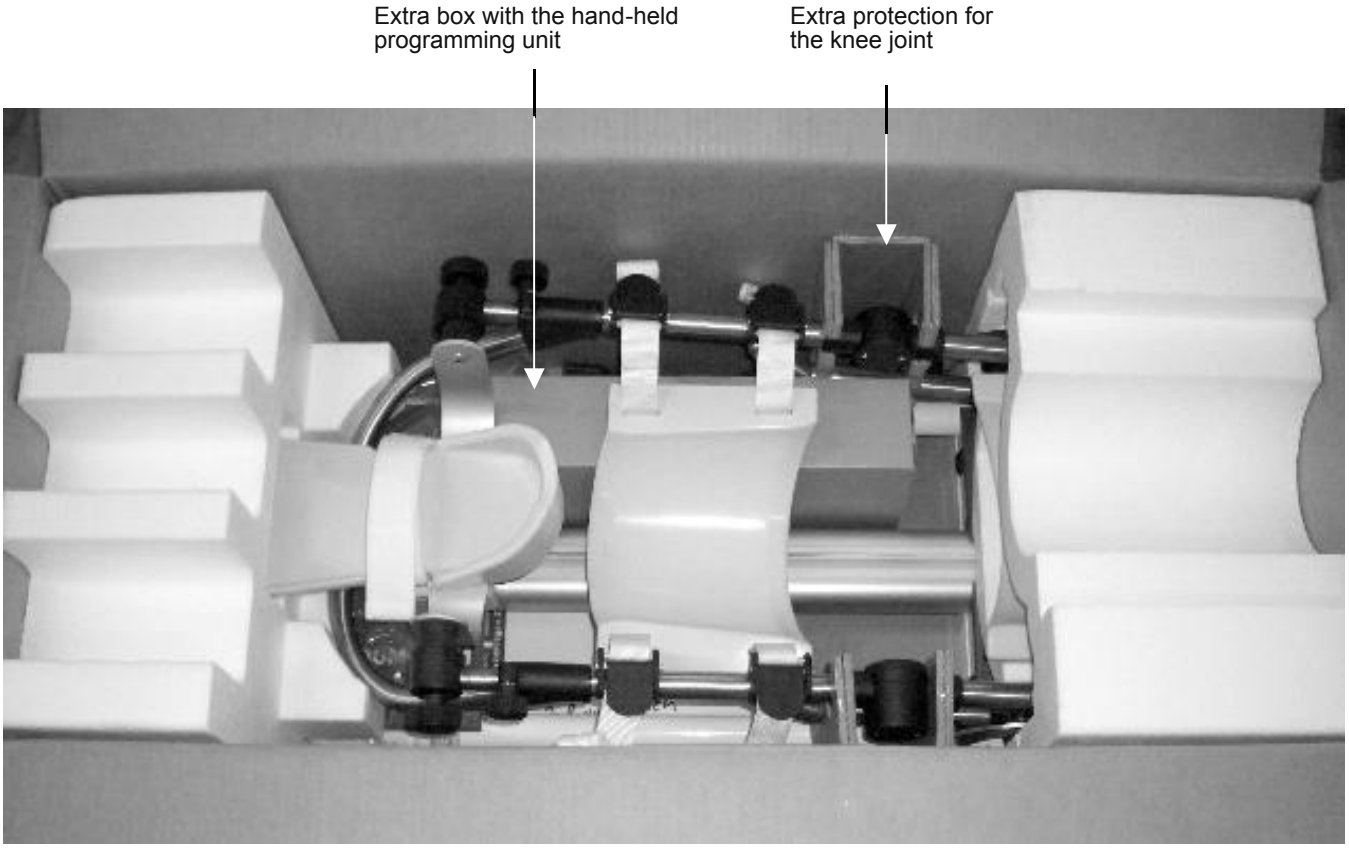

5. Block diagramm of the electronic parts OptiFlex-K1

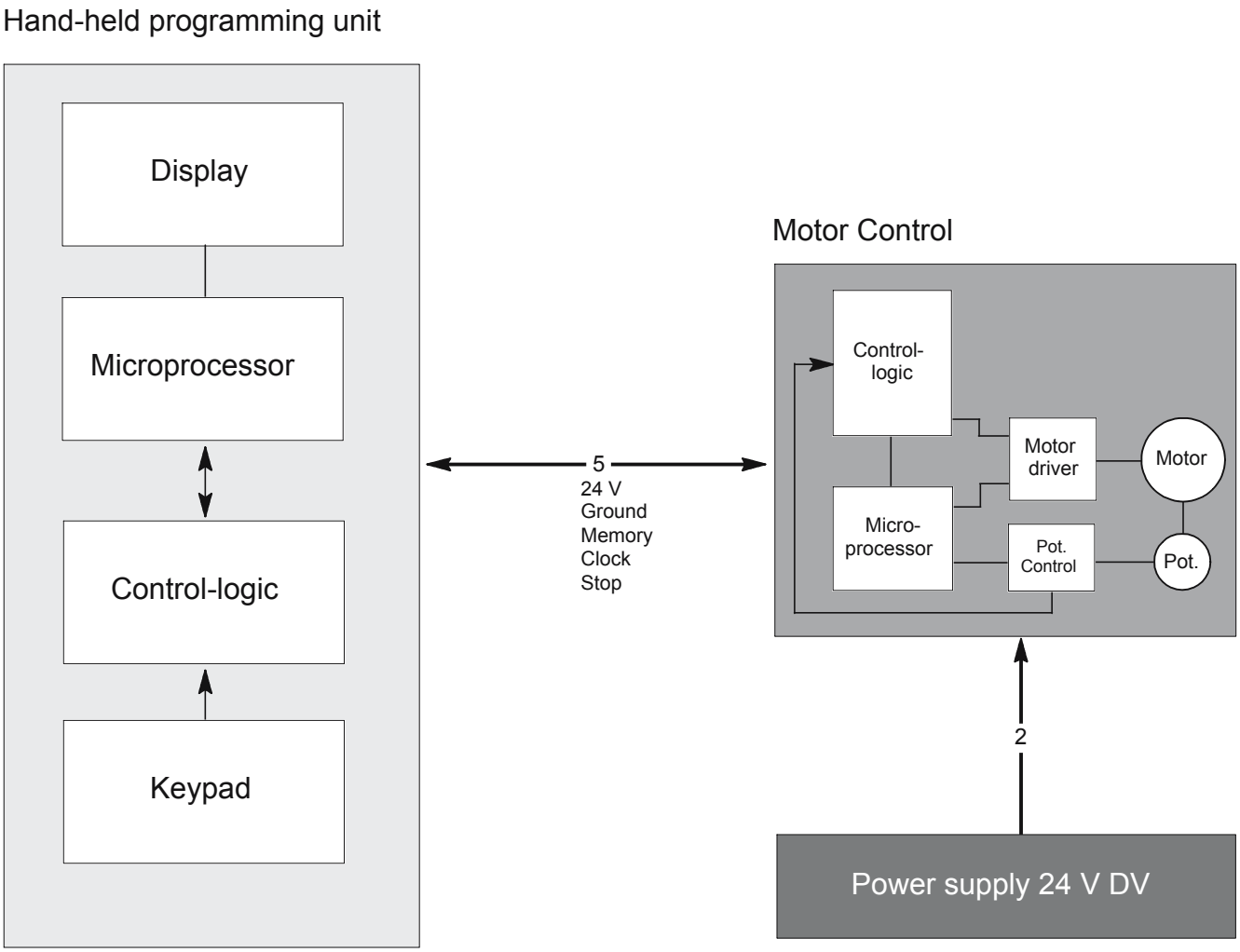

6. Bill of material for service parts OptiFlex-K1

Position	Description	Ordernumber
2	Fixation screw	GN534-32-M5sw
	Washer	DIN125D6A2
	Countersunk screw	DIN933M5x20A2
3	Knee electronics complete	0.0037.041
4	Fixation screw	GN534-32-M5sw
	Washer	DIN125D6A2
	Countersunk screw	DIN933M5x20A2
	Distance disk	DIN988D6x12x0,3
6	Footplate	0.0037.045
7	Fixation screw	GN534-40-M6sw
	Rubber puffer complete for angle joint	0.0037.202
9	Connection hand held programming unit	2.0037.004
10 + 12	Power switch (ON/OFF) with connection	0.0034.245
11	Fuses cap	0.0034.246
	Fuses 1 AT	0.0000.005
14	Hand held programming unit with spiral cable OptiFlex	0.0037.062
	Protection for hand held programming unit	0.0037.103
	Holder K1 hand held programming unit	0.0037.076
15	Spiral cable hand held programming unit	2.0037.035
16	Holding clip	0.0031.004
17	Housing cover OptiFlex-K1 with sticker	0.0037.205
18	Housing cover OptiFlex-K small	0.0037.206
19	Spiral cable black for potentiometer	0.0037.007
20	Motor control K1	2.0037.901RevB
21	Motor complete	0.0037.075
22	Wire set	2.0037.005
23	Power supply electronics	0.0034.244
24	Lip	2.0037.105
	Wire for lip	0.0031.300
25	Spindle complete K1 with alu profile	0.0037.210
	Power cord USA version	0.0034.011
	Option: Frame adapter add-on-kit	0.0037.204

7. Figure for bill of material

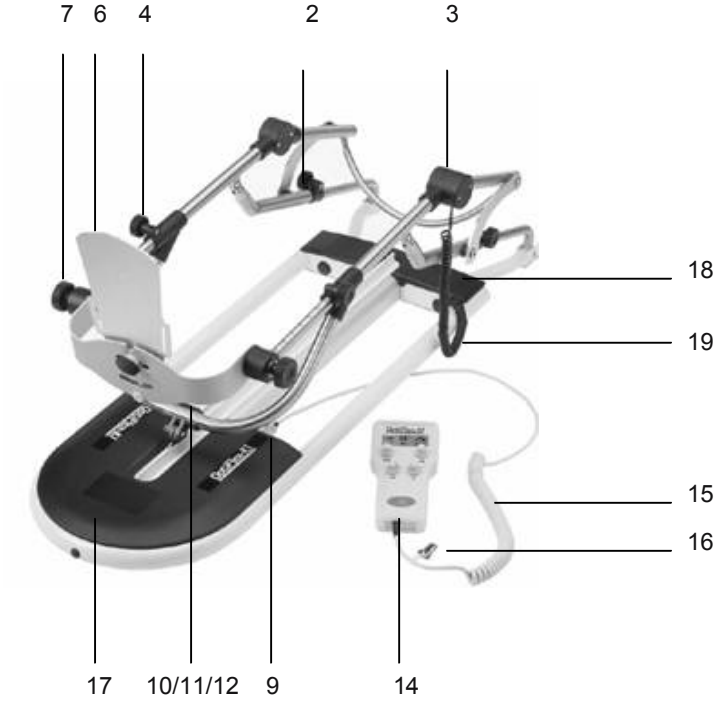

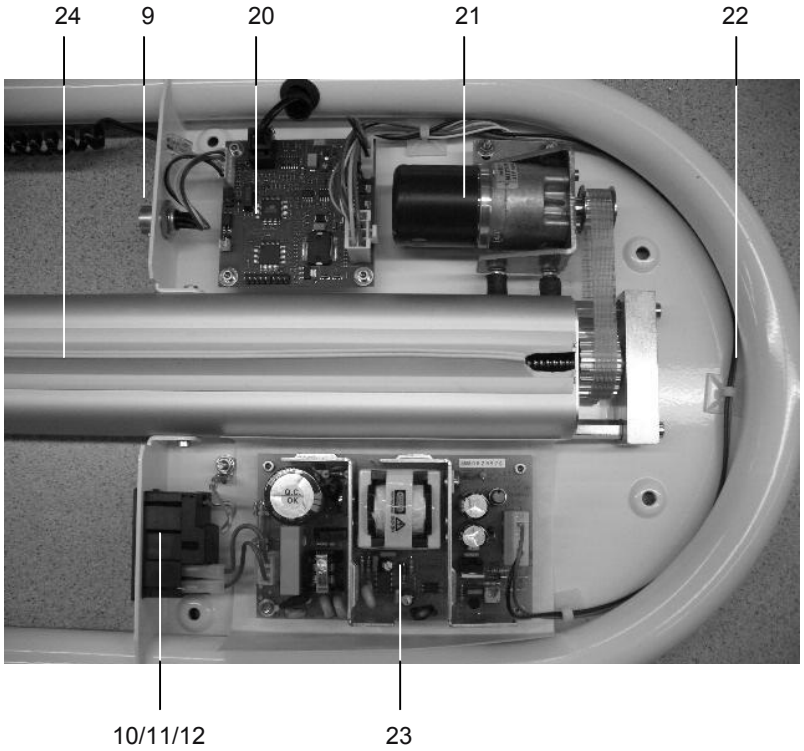

Position 25

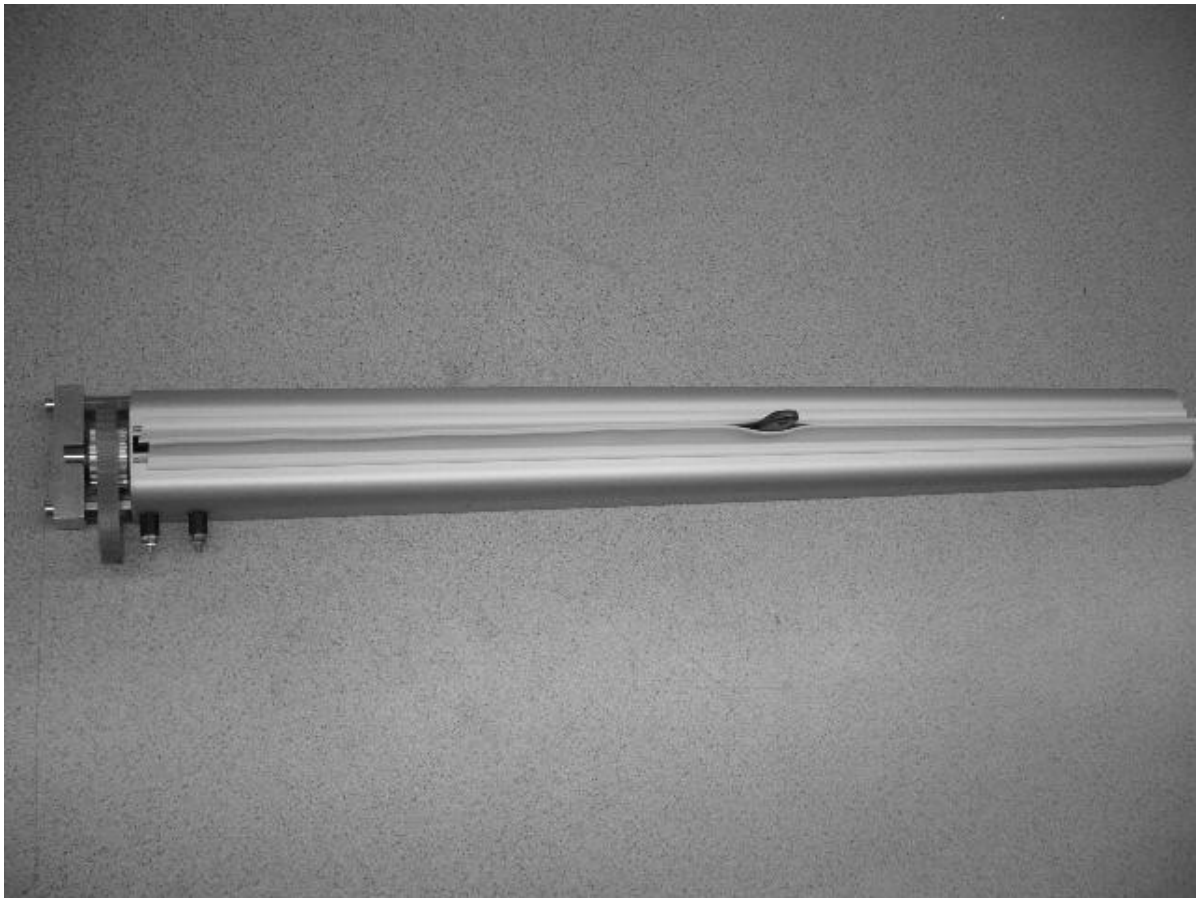

8. Special function Service Menu OptiFlex-K1

Function of service Menu

Calibration

Display contrast

Error log

Device runtime

Entering the service menu:

Switch off the OptiFlexK1.

When you switch on the device press simultaneously

the Extension control

and the Flexion control

Display will show following symbol:
Entering code.

For the code press the control as shown below:

1 3 2 4

Now you see the symbols of the service menu:

8.1 Calibration

ATTENTION!

Before you do a calibration switch the device OFF and ON.

Femur setting: 49 cm.

Press the Extension control.

Display:

Keep on pressing the control

Extension (OptiFlex-K1 move in direction Extension)

Flexion (OptiFlex-K1 move in direction Flexion)

until the OptiFlex-K1 reach 0 degrees.

Press START, the calibration starts automatically. The device will reach both maximum points and move between –10 bis 120 degrees with different speed.

Wait until the OptiFlex-K1 stops.
If the calibration was succesful the device stops at 0 degrees and show following symbols on the display:

Display:

Press STOP twice to leave the service menu.

Finally, a safety and function test has to be performed (see chapter 10).

8.2 Display contrast

Press the speed control.

Display:

XX %

Press the control

Extension (value decrease)

Flexion (value increase)

to set up the requested display contrast. You can set the display contrast from 0 – 100 %

Press STOP twice to save the settings and leave the service menu.

8.3 Error log

Press the pause control

You will find following information on the display:

Upper line: Number of the current showed error message and the total number of the saved error messages.

Lower line: Error message
Left side: The symbol of the causer.

= Hand held programming unit = Motor

Press the control

Extension (last entry)

Flexion (next entry)

to see the entries of the error log.

Press STOP twice to leave the service menu.

General note to the error log

Entries are always in english.
The entries are ordered by causer and not in temporal order.

8.4 Device runtime

Keep on pressing the Flexion control.

The display shows the device runtime

Display: **XX** (XX = Runtime in hours).

Press STOP twice to leave the service menu.

9. How to perform repairs

9.1 How to remove the housing cover (Pos. 17 + 18).

Move OptiFlex-K1 in a position approximately 80 degrees.

Turn of the power OFF at the OptiFlex-K1 and remove the power cord.

Move the OptiFlex-K1 in a stable side position.

Loosen the 4 outside torx screws to remove the housing cover K1 with sticker (Pos. 17).

Loosen the 2 torx screws to remove the housing cover small (Pos. 18).

If you have to exchange any of the printed circuit boards including the knee electronics or motor control you have to perform a calibration.

9.2 How to exchange the motor control (Pos. 20).

ATTENTION!

When you assembling with electronic parts make sure to use ESD (Electro Static Discharge) equipment.

Remove the housing cover, see chapter 9.1.

Pull out the connectors of the motor control.

Loosen the four screws.

Exchange the defective motor control and fix it with the screws.

Put back in the connectors in the same position.

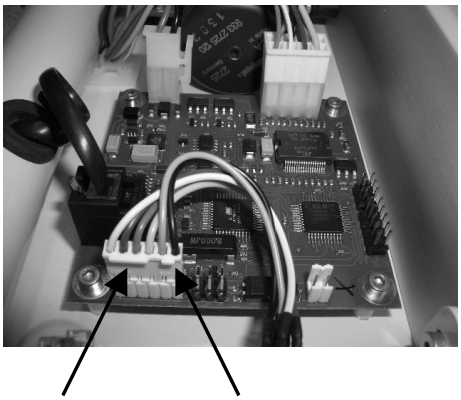

3-pin connector 2-pin connector

Rebuild the housing cover.

Perform a calibration.

Finally, a safety and function test has to be performed.

9.3 How to exchange the power supply electronics (Pos. 23).

ATTENTION!

When you assembling with electronic parts make sure to use ESD (Electro Static Discharge) equipment.

Remove the housing cover, see chapter 9.1.

Pull out the connectors of the power supply electronics.

Loosen the four screws.

Exchange the defective electronics and fix it with the screws.

Put back in the connectors in the same position.

Rebuild the housing cover.

Perform a calibration.

Finally, a safety and function test has to be performed.

9.4 Repairs of the drive unit (Pos. 21 + 25).

ATTENTION!

Only authorized and certified staff may perform repairs and maintenance at the drive unit otherwise the manufacturer´s warranty and liability will be invalidated.

10. Checklist of safety and function test OptiFlex-K1

Safety test

		Measured value	Date/ Signature
Protective earth conductor resistance	≤ 0,1 Ohm	Ohm	
Ground leakkage current EN 60601 / IEC 601/ VDE 0751	≤ 500 µA	µA	
Or			
Ground leakkage current as in UL 2601	≤ 300 µA	µA	

Function test	OK	Error
1. Switch on the OptiFlex -K1. Press the two outer control (Extension/ Flexion) simultaneously. Display: Software version VX.X XX.XX.XX (X = optional) Keep on pressing. Display: Artromot K1 Classic		
2. The maximum range of motion for Extension/ Flexion is -10 to 120 degrees. Check the angle in position 0 degrees. Tolerance +/- 5 degrees. Check the angle in position 60 degrees. Tolerance +/- 5 degrees. Check the angle in position 100 degrees. Tolerance +/- 5 degrees.		
3. Check the emergency-off function. Start the OptiFlex K1 in any mode. Press any control, the OptiFlex- K1 will stop immediately. Check this for all controls.		
4. Checking the "PAUSE" function. Select the following settings: Extension = 10 degrees Flexion = 90 degrees Speed = 50% Pause = 10 seconds Start the OptiFlex-K1. At the reversal points (at 10 / 90 degrees) the pause must be lasting 10 seconds (+/- 2 seconds). The speed is substantially lower than in a 100% setting.		
5. Start the OptiFlex -K1 in the motion range between –10 to 120 degrees. Set the speed to 100%. Both extreme points should be reached within 45 – 65 seconds.		

DIN EN 13485 ORMED Nr. 018 829-01

ORMED GmbH & Co. KG • Merzhauser Straße 112 • D -79100 Freiburg
Tel +49 761 4566-01 • Fax +49 0761 4566-5501 • www.ormed.de • E-Mail: info@ormed.de

ORMED IDEAS IN MOTION